imp006-breakout

Intro

The imp006-breakout design is intended to serve two purposes:

1. Provide a off-the-shelf hardware platform that allows a customer to evaluate the imp006 product & Twilio/Electric Imp platform

In order to evaluate the imp006, customers need to be able to connect it to sensors and actuators, build an application, integrate it with a cloud backend, and measure various parameters such as power consumption and latency to determine if they meet requirements. To satisfy these requirements, the imp006-breakout has various on-board peripherals, industry standard expansion connectors, and a configurable power supply to satisfy several common power scenarios.

2. Provide a reference design that customers can use to base their own imp006 products on

The schematics presented here are modular, with source provided for both schematics and PCB; a customer requiring only cellular connectivity can simply remove the entire WiFi/BLE page (and conversely, a customer needing only WiFi/BLE can remove the cellular page). At a more granular level within each schematic sheet, each functional area is boxed with a short description of the functionality it provides - for example, if GNSS is not required but cellular is, the GNSS parts of the cellular page can be removed without any side-effects.

Index

1: This page.

2: Core imp006: components on this page are all required in every customer design - the MCU, QSPI flash, blinkup and status LEDs.

3: Power: the power system is designed to work with both primary cells (or external power) and Li-Ion rechargeable cells; pick the power supply which suits your application, or omit this section and supply power to the components with your own power supplies.

4: Connectors/Peripherals: this page is really quite breakout-specific, but shows how various peripherals can be wired (eg sensors).

5: Cellular: parts required to support the Quectel BG96 Cat-M/2G/NB-IoT+GNSS radio. Can be omitted for WiFi/BLE only designs.

6: WiFi/BLE: parts required to support the Murata 1MW dual-band 802.11ac/a/b/g/n + BLE 4.1 radio. Can be omitted for cellular only designs.

Copyright © 2020, Twilio Inc.

Permission is hereby granted, free of charge, to any person obtaining a copy of this work and associated documentation file s (the "Work"), to deal in the Work without restriction, including without limitation the rights to use, copy, modify, merge, publish, distribute, sublicense, and/or sell copies of the Work, and to permit persons to whom the Work is furnished to do so, subject to the following conditions:

The above copyright notice and this permission notice shall be included in all copies or substantial portions of the Work.

THE WORK IS PROVIDED "AS IS", WITHOUT WARRANTY OF ANY KIND, EXPRESS OR IMPLIED, INCLUDING BUT NOT LIMITED TO THE WARRANTIES OF MERCHANTABILITY, FITNESS FOR A PARTICULAR PURPOSE AND NONINFRINGEMENT. IN NO EVENT SHALL THE AUTHORS OR COPYRIGHT HOLDERS BE LIABLE FOR ANY CLAIM, DAMAGES OR OTHER LIABILITY, WHETHER IN AN ACTION OF CONTRACT, TORT OR OTHERWISE, ARISING FROM, OUT OF OR IN CONNECTION WITH THE WORK OR THE USE OR OTHER DEALINGS IN THE WORK.

Design: **imp006-breakout**	Rev: **4.0**	Twilio 375 Beale St Suite 300, San Francisco, CA, 94105
Sheet: 1 of 6 Date: 28/05/2021 Time: 08:25:07		
File:Z:\ei-hardware\imp006\imp006-breakout\imp006-breakout-titlepage.SchDoc		

imp006 clocks & application I/O

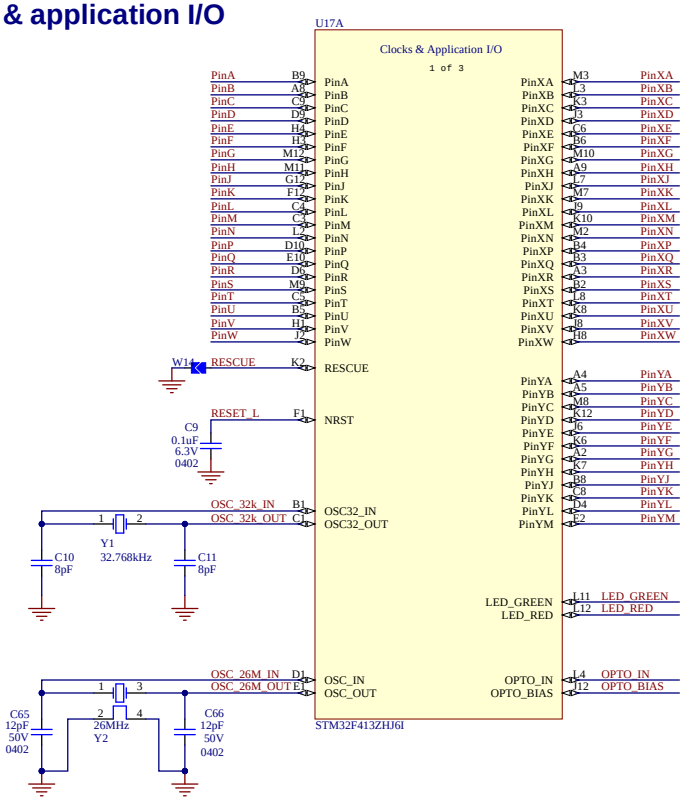

imp006 power

If a backup battery is not used in your design, connect VDD_BAT to 3V3

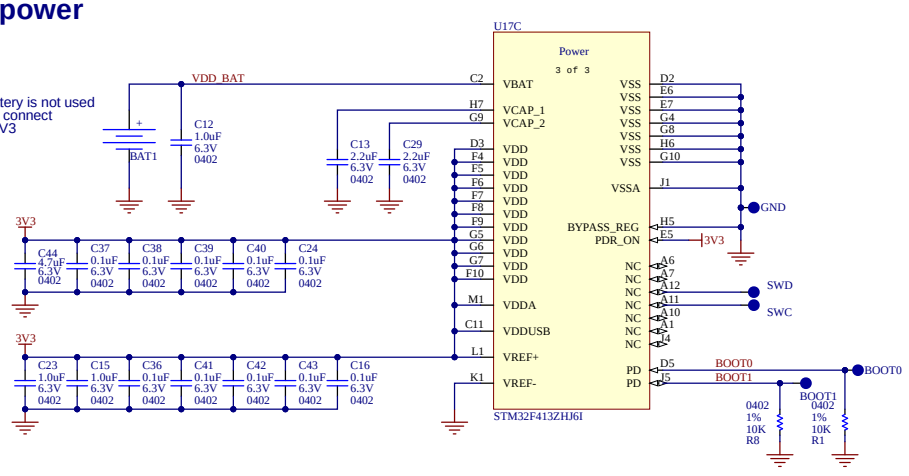

Reset switch

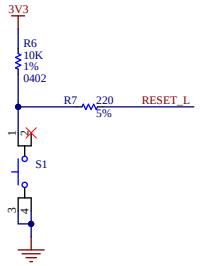

QSPI flash

Pulldown on QSPI_CLK reduces power on some flash devices
(even when nCS high, CLK floating can use significant power draw)

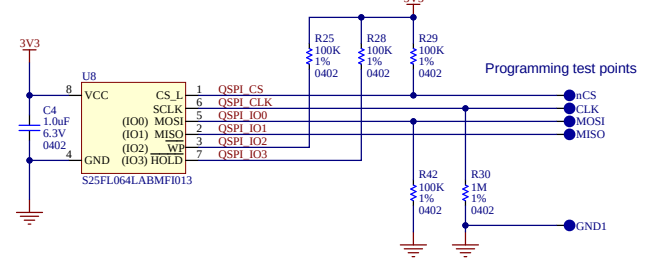

BlinkUp Phototransistor

Note: consult tuning guide on Electric Imp dev center to set resistor value in your own design

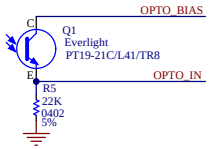

Status LED

imp006 supports both common anode and common cathode LEDs
The resistor across the red LED is used to auto-detect

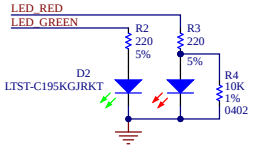

QSPI and radio connections

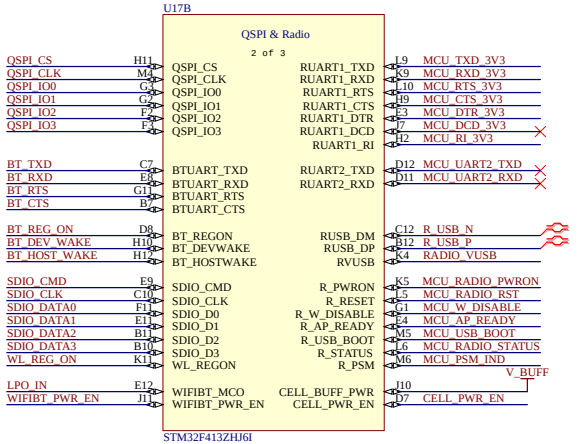

Copyright © 2020, Twilio Inc.

Permission is hereby granted, free of charge, to any person obtaining a copy of this work and associated documentation file s (the "Work"), to deal in the Work without restriction, including without limitation the rights to use, copy, modify, merge, publish, distribute, sublicense, and/or sell copies of the Work, and to permit persons to whom the Work is furnished to do so, subject to the following conditions:

The above copyright notice and this permission notice shall be included in all copies or substantial portions of the Work.

THE WORK IS PROVIDED "AS IS", WITHOUT WARRANTY OF ANY KIND, EXPRESS OR IMPLIED, INCLUDING BUT NOT LIMITED TO THE WARRANTIES OF MERCHANTABILITY, FITNESS FOR A PARTICULAR PURPOSE AND NONINFRINGEMENT. IN NO EVENT SHALL THE AUTHORS OR COPYRIGHT HOLDERS BE LIABLE FOR ANY CLAIM, DAMAGES OR OTHER LIABILITY, WHETHER IN AN ACTION OF CONTRACT, TORT OR OTHERWISE, ARISING FROM, OUT OF OR IN CONNECTION WITH THE WORK OR THE USE OR OTHER DEALINGS IN THE WORK.

Design: **imp006-breakout**	Rev: **4.0**	Twilio 375 Beale St Suite 300, San Francisco, CA, 94105
Sheet: 2 of 6 Date: 28/05/2021 Time: 08:25:07		
File:Z:\ei-hardware\imp006\imp006-breakout\imp006-breakout-MCU-flash.SchDoc		

Power selection jumpers

The imp006-breakout is designed for extreme power savings in multiple operating modes

JP-A: Force buck on

JP-A is used to force the primary buck ON, regardless of whether the MCU wants either radio to be powered.

This is used when JP-A is set to 2-3, so that the primary buck will run continuously to provide the MCU with power, or when power needs to be preserved to the BG96 (eg for GPS state preserve).

If the primary cell used is <10v (and JP-C is hence set to 2-3), the primary buck will only run when required, reducing Iq

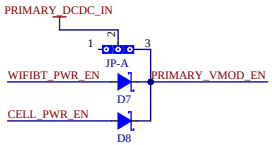

JP-B: VMOD select

JP-B determines how VMOD, the radio power supply (both cellular and WiFi/BT), is provided.

1-2: Power VMOD from VSYS, the Li-Ion PMU system output. This is used when a Li-Ion rechargeable cell is powering the system

2-3: Power VMOD from the 3v8 buck, which is used when a primary battery pack is in use.

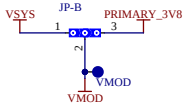

JP-C: 3V3 select

JP-C determines how 3V3, the imp MCU power supply is provided.

1-2: Power 3V3 from VMOD, which could be VSYS or the primary buck. This is used when a Li-Ion cell is in use or a primary cell of >10V (the highest acceptable input for the 3v3 buck) is used.

2-3: power the 3V3 buck direct from the primary cell. ONLY USE THIS WHEN THE PRIMARY CELL MAX VOLTAGE IS <10V

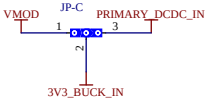

JP-D: USB Only power

JP-D is used to bypass PMU U1 from 5V0_IN to PRIMARY_IN, intended for battery-less operation only from USB power input.

1-2: 3V8 DCDC taking input from Primary battery.

2-3: 3V8 DCDC taking 5V0 USB as an input.

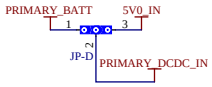

Common configurations

Li-Ion rechargeable cell

JP-A:1-2, JP-B:1-2, JP-C:1-2, JP-D:1-2

Primary cell, 4-10v

JP-A:1-2, JP-B:2-3, JP-C:2-3, JP-D:1-2

Primary cell, 10v-17v

JP-A:2-3, JP-B:2-3, JP-C:1-2, JP-D:1-2

USB Only (no battery) *

JP-A:2-3, JP-B:2-3, JP-C:2-3, JP-D:2-3

* Default factory state

Primary battery 3V8 supply

Input range ~4v-17v

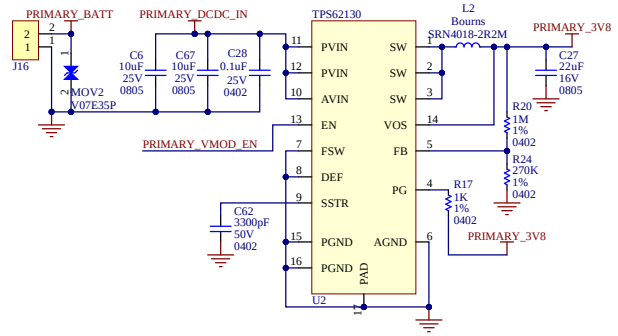

Li-Ion battery & gas gauge

8-bit I2C address: 0x6C

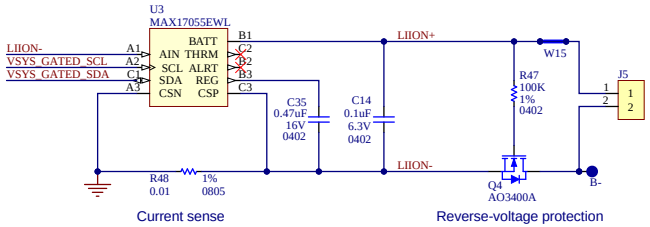

Current sense

Reverse-voltage protection

Primary Battery Voltage Measurement

To use, short W12 and W9, then drive pinYG high to read scaled voltage on pinXD

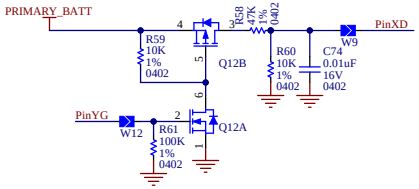

Ultra-low Iq 3v3 supply

Input range ~3.7v to 10v

Used in all power configurations to power MCU and peripherals

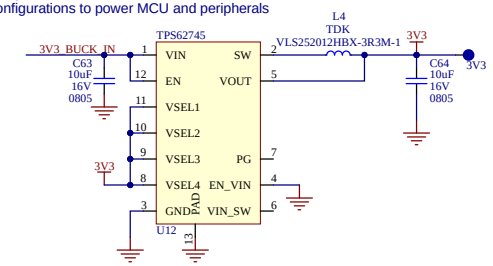

Li-Ion PMU/battery charger & power path

8-bit I2C address: 0xD6

When J13 is used for power input, the USB DM/DP brick detect will not work, so short W1 to set 3A input current limit

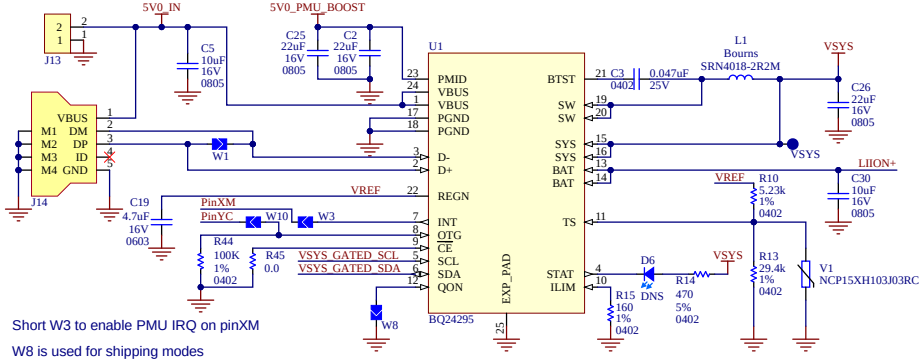

Short W3 to enable PMU IRQ on pinXM

W8 is used for shipping modes

W10 enables pinYC control of 5V0_PMU_BOOST

I2C bus isolator

This ensures an unpowered PMU & GG do not load the I2C bus when a primary cell power source is used. Applicable only to this breakout board

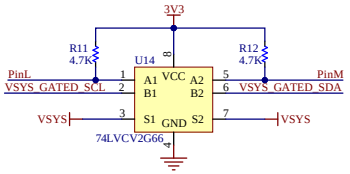

Alternative Ultra-low Iq 3v3 supply

Input range ~3.5v to 17v

Used in all power configurations to power MCU and peripherals

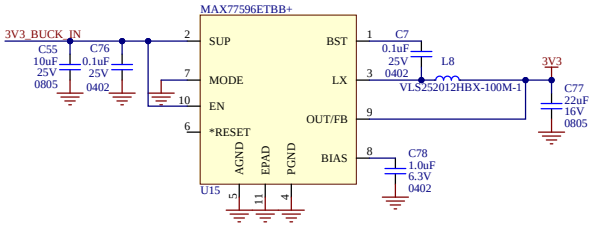

Copyright © 2020, Twilio Inc.

Permission is hereby granted, free of charge, to any person obtaining a copy of this work and associated documentation file s (the "Work"), to deal in the Work without restriction, including without limitation the rights to use, copy, modify, merge, publish, distribute, sublicense, and/or sell copies of the Work, and to permit persons to whom the Work is furnished to do so, subject to the following conditions:

The above copyright notice and this permission notice shall be included in all copies or substantial portions of the Work.

THE WORK IS PROVIDED "AS IS", WITHOUT WARRANTY OF ANY KIND, EXPRESS OR IMPLIED, INCLUDING BUT NOT LIMITED TO THE WARRANTIES OF MERCHANTABILITY, FITNESS FOR A PARTICULAR PURPOSE AND NONINFRINGEMENT. IN NO EVENT SHALL THE AUTHORS OR COPYRIGHT HOLDERS BE LIABLE FOR ANY CLAIM, DAMAGES OR OTHER LIABILITY, WHETHER IN AN ACTION OF CONTRACT, TORT OR OTHERWISE, ARISING FROM, OUT OF OR IN CONNECTION WITH THE WORK OR THE USE OR OTHER DEALINGS IN THE WORK.

Design: **imp006-breakout**	Rev: **4.0**	Twilio 375 Beale St Suite 300, San Francisco, CA, 94105
Sheet: 3 of 6 Date: 28/05/2021 Time: 08:25:07		
File:Z:\ei-hardware\imp006\imp006-breakout\imp006-breakout-power.SchDoc		

Breakout Connector

0.1" pitch 2x20 header

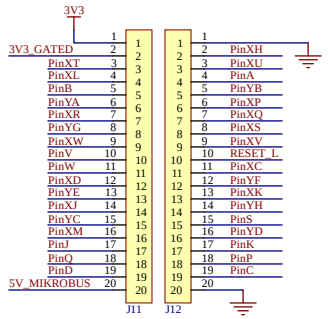

User RGB LED

All pins are PWMable, but can also be driven as static levels with the MCU in microamp mode for low power status

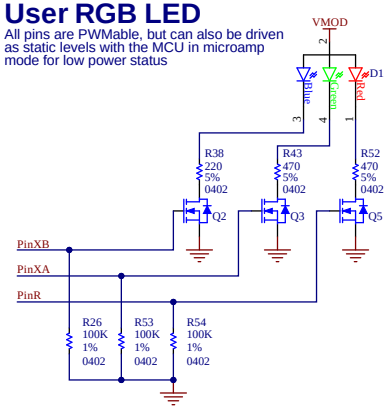

Power gate for Grove/Mikrobus

TPS22919 used to control inrush currents
Short W2 to force 3V3_GATED on
(if gated peripherals need to be on during deep sleep)

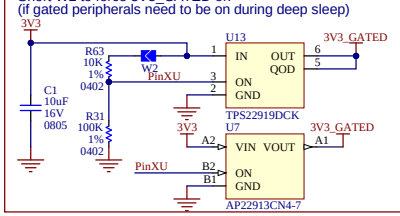

3-Axis Accelerometer

8-bit I2C address: 0x32 (SA0 High)
INT1 can wake imp from deep sleep via D3

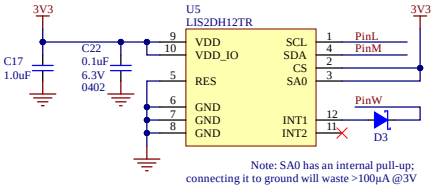

Note: SA0 has an internal pull-up; connecting it to ground will waste >100µA @3V

Temperature & Humidity sensor

8-bit I2C address: 0xBE

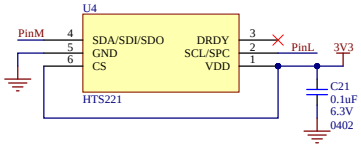

Grove connectors for I2C and digital/analog

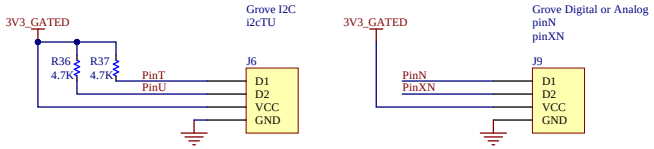

Mikrobus socket

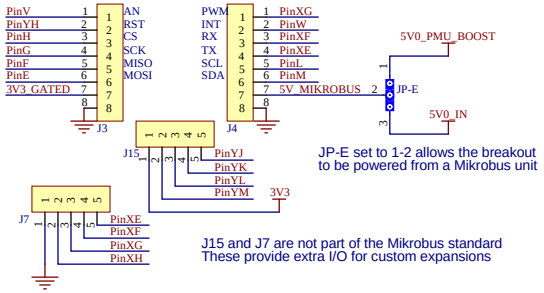

JP-E set to 1-2 allows the breakout to be powered from a Mikrobus unit

J15 and J7 are not part of the Mikrobus standard
These provide extra I/O for custom expansions

Copyright © 2020, Twilio Inc.

Permission is hereby granted, free of charge, to any person obtaining a copy of this work and associated documentation file s (the "Work"), to deal in the Work without restriction, including without limitation the rights to use, copy, modify, merge, publish, distribute, sublicense, and/or sell copies of the Work, and to permit persons to whom the Work is furnished to do so, subject to the following conditions:

The above copyright notice and this permission notice shall be included in all copies or substantial portions of the Work.

THE WORK IS PROVIDED "AS IS", WITHOUT WARRANTY OF ANY KIND, EXPRESS OR IMPLIED, INCLUDING BUT NOT LIMITED TO THE WARRANTIES OF MERCHANTABILITY, FITNESS FOR A PARTICULAR PURPOSE AND NONINFRINGEMENT. IN NO EVENT SHALL THE AUTHORS OR COPYRIGHT HOLDERS BE LIABLE FOR ANY CLAIM, DAMAGES OR OTHER LIABILITY, WHETHER IN AN ACTION OF CONTRACT, TORT OR OTHERWISE, ARISING FROM, OUT OF OR IN CONNECTION WITH THE WORK OR THE USE OR OTHER DEALINGS IN THE WORK.

Design: **imp006-breakout**	Rev: **4.0**	Twilio 375 Beale St Suite 300, San Francisco, CA, 94105
Sheet: 4 of 6 Date: 28/05/2021 Time: 08:25:08		
File: Z:\ei-hardware\imp006\imp006-breakout\imp006-breakout-connectors.SchDoc		

Quectel BG96 Cat-M, NB-IoT, 2G & GNSS module

Note all I/Os are 1.8v

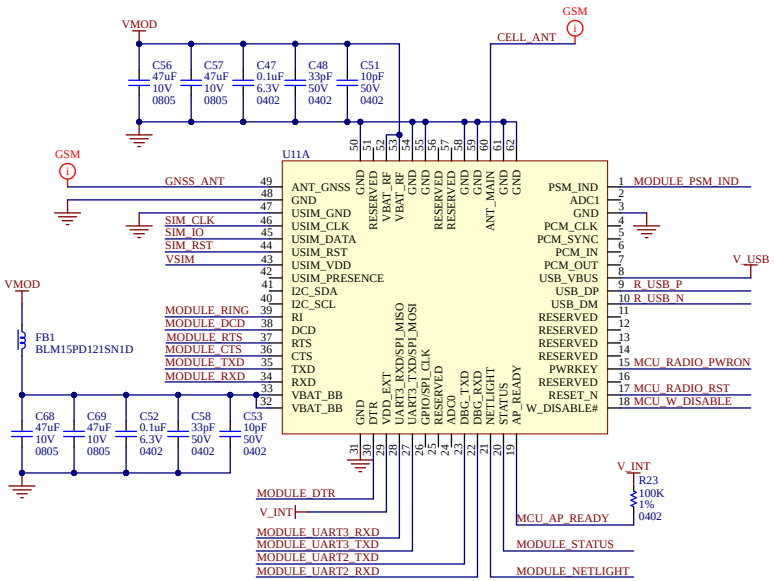

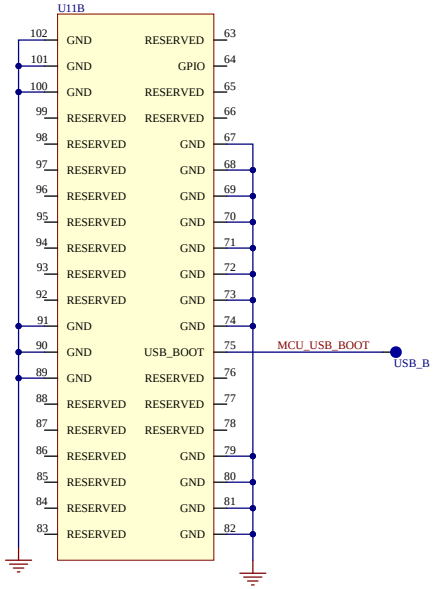

NOTE! GPS uart is 1v8

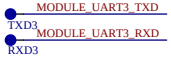

Cell antenna

Match circuit not stuffed; assumes 50 ohm antenna

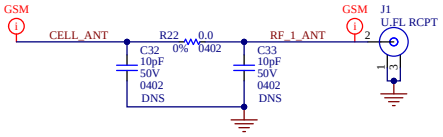

GNSS antenna

Match circuit not stuffed; assumes 50 ohm antenna
GPS antenna power is gated by MODULE_STATUS, so is only on when module is powered and awake

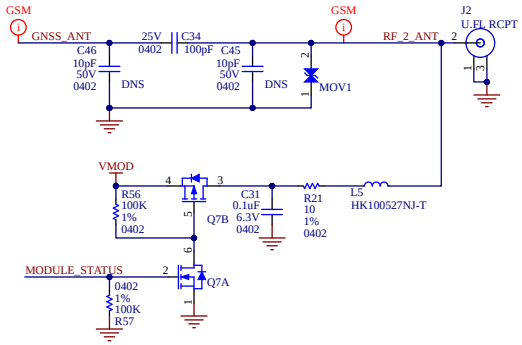

1v8 <> 3v3 level shifter

TXS0108 performs bidirectional level translation
NOTE: This part is very noise sensitive. Attaching a scope to what should be a driven output often causes unpredictable behavior

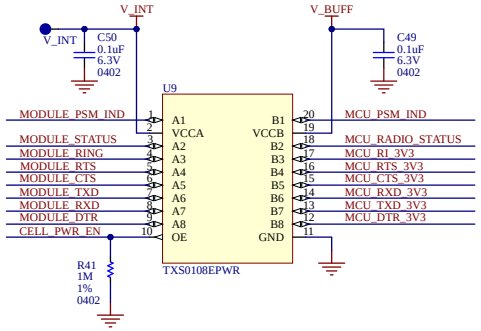

Nano SIM circuit

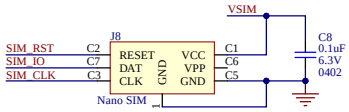

Radio brownout indicator

This circuit detects when VMOD drops below 3.3v when the radio is powered
If this happens, D5 is illuminated, indicating a possible supply issue. The indication is cleared by a reset
This usually indicates insufficient current available, especially on 2G networks
If W11 is shorted then the MCU can read this state in software

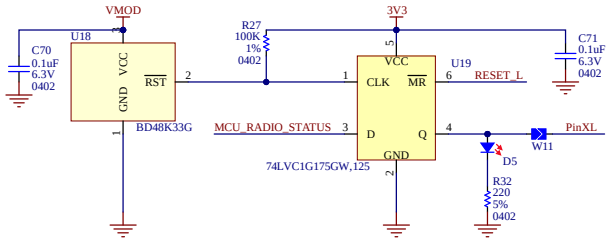

Radio VUSB gate

This circuit supplies V_USB from VMOD instead of 3V3
This provides extra margin against accidental USB disconnect if 3v3 is glitched

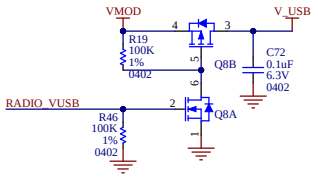

Network status LED

Searching for network: short on/long off
Registered on network: long on/short off
Data transfer: fast blinking

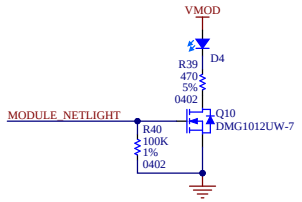

Copyright © 2020, Twilio Inc.

Permission is hereby granted, free of charge, to any person obtaining a copy of this work and associated documentation file s (the "Work"), to deal in the Work without restriction, including without limitation the rights to use, copy, modify, merge, publish, distribute, sublicense, and/or sell copies of the Work, and to permit persons to whom the Work is furnished to do so, subject to the following conditions:

The above copyright notice and this permission notice shall be included in all copies or substantial portions of the Work.

THE WORK IS PROVIDED "AS IS", WITHOUT WARRANTY OF ANY KIND, EXPRESS OR IMPLIED, INCLUDING BUT NOT LIMITED TO THE WARRANTIES OF MERCHANTABILITY, FITNESS FOR A PARTICULAR PURPOSE AND NONINFRINGEMENT. IN NO EVENT SHALL THE AUTHORS OR COPYRIGHT HOLDERS BE LIABLE FOR ANY CLAIM, DAMAGES OR OTHER LIABILITY, WHETHER IN AN ACTION OF CONTRACT, TORT OR OTHERWISE, ARISING FROM, OUT OF OR IN CONNECTION WITH THE WORK OR THE USE OR OTHER DEALINGS IN THE WORK.

Design: **imp006-breakout**	Rev: **4.0**	Twilio 375 Beale St Suite 300, San Francisco, CA, 94105
Sheet: 5 of 6 Date: 28/05/2021 Time: 08:25:08		
File:Z:\ei-hardware\imp006\imp006-breakout\imp006-breakout-BG96.SchDoc		

Dual-band WiFi & BT module

The Murata LBEE5HY1MW module is used to provide 2.4 & 5GHz WiFi ac/a/b/g/n and Bluetooth capabilities.

Please contact Electric Imp for guidance on using the Murata 1DX module if only single-band WiFi & BT is required.

If you are not using WiFi or BT in your design, this entire page can be omitted.

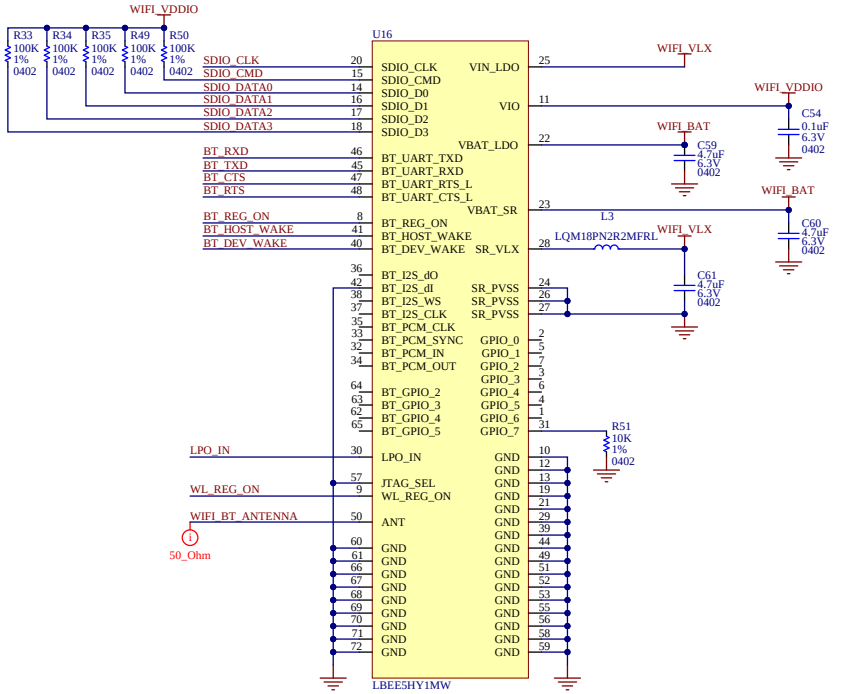

Dual-band WiFi & BT antenna

The on-board antenna is the Murata reference antenna, which was used for their FCC modular certification testing. Due to layout constraints, this antenna is not used in the best configuration on the imp006-breakout.

Please contact Murata for more details on correct 1MW antenna placement and usage

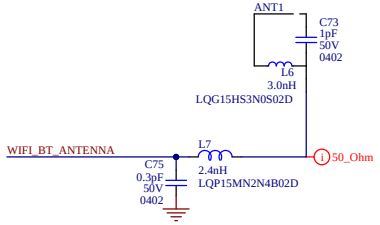

WiFi / BT power gate

In this design, because someone may be using the imp006 breakout just for cellular, WiFi / BT power is gated totally when WIFIBT_PWR_EN is low; this saves 11uA for designs that aren't using WiFI or BT.

WIFI_VDDIO is gated by WIFI_BAT, ensuring that it comes up after WIFI_BAT as specified in the CYW43455 datasheet.

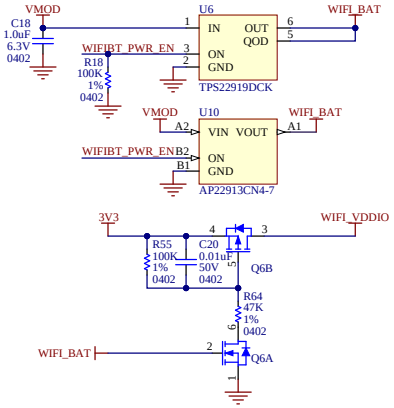

Copyright © 2020, Twilio Inc.

Permission is hereby granted, free of charge, to any person obtaining a copy of this work and associated documentation file s (the "Work"), to deal in the Work without restriction, including without limitation the rights to use, copy, modify, merge, publish, distribute, sublicense, and/or sell copies of the Work, and to permit persons to whom the Work is furnished to do so, subject to the following conditions:

The above copyright notice and this permission notice shall be included in all copies or substantial portions of the Work.

THE WORK IS PROVIDED "AS IS", WITHOUT WARRANTY OF ANY KIND, EXPRESS OR IMPLIED, INCLUDING BUT NOT LIMITED TO THE WARRANTIES OF MERCHANTABILITY, FITNESS FOR A PARTICULAR PURPOSE AND NONINFRINGEMENT. IN NO EVENT SHALL THE AUTHORS OR COPYRIGHT HOLDERS BE LIABLE FOR ANY CLAIM, DAMAGES OR OTHER LIABILITY, WHETHER IN AN ACTION OF CONTRACT, TORT OR OTHERWISE, ARISING FROM, OUT OF OR IN CONNECTION WITH THE WORK OR THE USE OR OTHER DEALINGS IN THE WORK.

Design: **imp006-breakout**	Rev: **4.0**	Twilio 375 Beale St Suite 300, San Francisco, CA, 94105
Sheet: 6 of 6 Date: 28/05/2021 Time: 08:25:08		
File:Z:\ei-hardware\imp006\imp006-breakout\imp006-breakout-type1mw.SchDoc		